MODEL # S-20-058

NST
NILES STEEL TANK
SINCE 1898

Design Notes

Code..... Non-Code
Design Pressure..... 150 psi
Test Pressure.....150 psi
Interior.... Ultonium® Glass Lining with Microban®
Exterior.....Primed Painted
Supports.....Sits on Shell
Capacity.....80 Gal.
Weight.....100 Lbs.

Material Specifications

Heads..... Carbon Steel
Shell..... Carbon Steel
Couplings..... Carbon Steel
Flanges..... N/A
Pipe..... N/A
Manway..... N/A

Microban® antimicrobial product protection helps prevent the growth of bacteria, mold and mildew that may affect the product. The built-in antimicrobial properties do not protect users or others from disease-causing organisms. Microban® is a registered trademark of Microban Products Company.

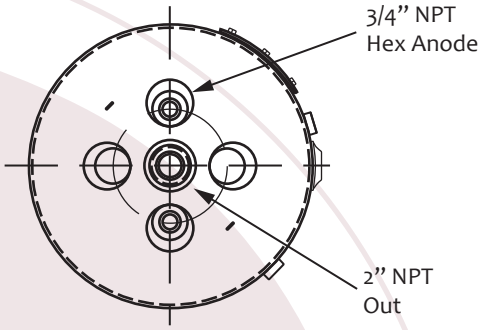

Mark	Dimension	Remark
A	58 1/4"	Overall height
B	52 1/16"	Relief
C	20"	Diameter
D	13 13/16"	Circulation
E	8 13/16"	Circulation
G	4 5/16"	Drain

NOTES	
PROJECT	
CUSTOMER	
SCALE	Not to Scale
DATE	
CUSTOMER P.O. #	
DRAWING Rev NO.	

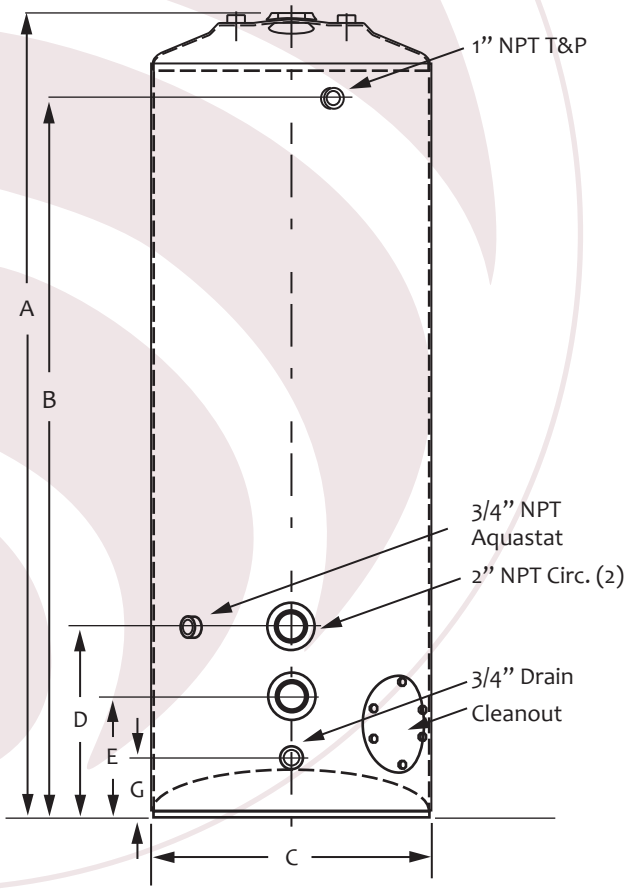

VERTICAL STORAGE TANK

NILES STEEL TANK • 1701 TERMINAL ROAD • PO BOX 728 • NILES • MI • 49120
PHONE • 269-683-1910 FAX • 269-683-1953 WWW.nilesst.com

A SUBSIDIARY OF BRADFORD WHITE CORPORATION