MODEL # JS-36-072

NST
NILES STEEL TANK
SINCE 1898

Design Notes

Code..... ASME Sec IV HLW
Design Pressure..... 125 psi
Test Pressure.....125 psi
Interior.... Ultonium® Glass Lining with Microban®
Exterior..... Baked Enamel Steel Jacket
Insulation..... 2" R-12.5 Open Cell Foam
Supports..... 2" Rails
Capacity.....285 Gal./ 318 nominal
Weight.....714 Lbs.

Material Specifications

Heads..... Carbon Steel
Shell..... Carbon Steel
Couplings..... Carbon Steel
Flanges..... N/A
Pipe..... N/A
Manway..... N/A
Jacket..... 24 Gauge Steel

Microban® antimicrobial product protection helps prevent the growth of bacteria, mold and mildew that may affect the product. The built-in antimicrobial properties do not protect users or others from disease-causing organisms. Microban® is a registered trademark of Microban Products Company.

Mark	Dimension	Remark
A	80"	Overall height
B	40"	Diameter
C	21"	Circulation

NOTES	
PROJECT	
CUSTOMER	
SCALE	Not to Scale
DATE	
CUSTOMER P.O. #	
DRAWING Rev NO.	

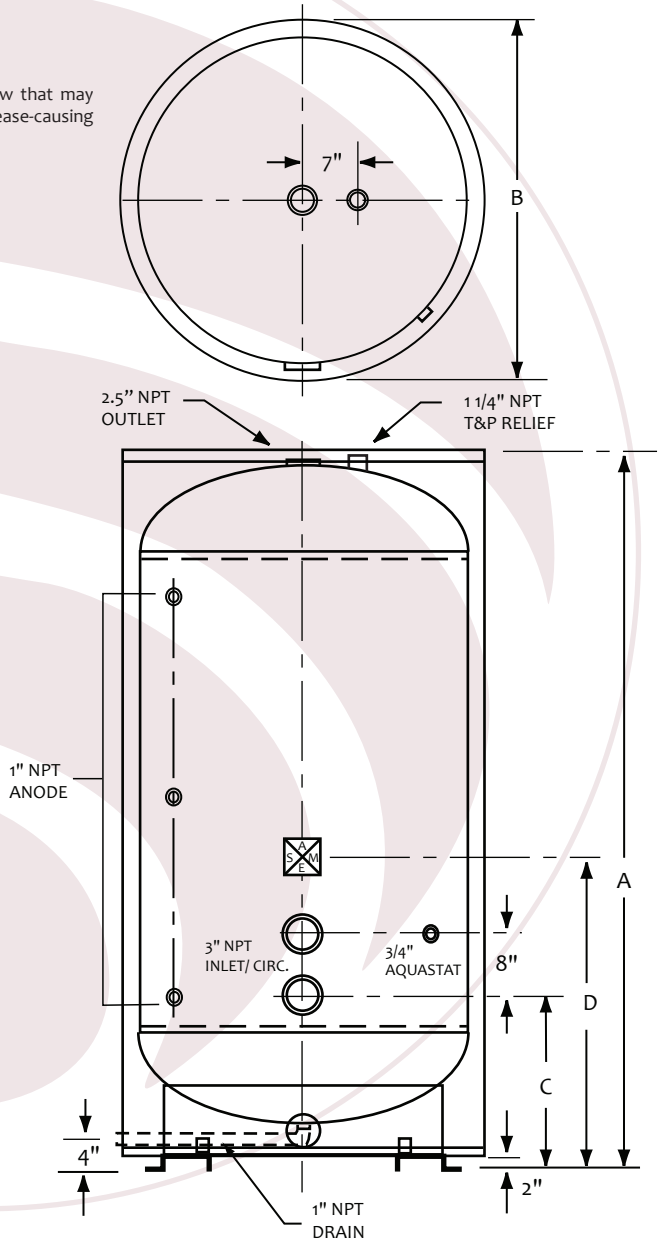

VERTICAL STORAGE TANK

NILES STEEL TANK • 1701 TERMINAL ROAD • PO BOX 728 • NILES • MI • 49120
PHONE • 269-683-1910 FAX • 269-683-1953 WWW.nilesst.com

A SUBSIDIARY OF BRADFORD WHITE CORPORATION