MODEL # S-60-114-TC

NST
NILES STEEL TANK
SINCE 1898

Design Notes

Code..... ASME Sec IV HLW
Design Pressure..... 125 psi
Test Pressure.....125 psi
Interior.....Ultonium Glass Lining
Exterior.....R-16 Topcoat Insulation
Supports.....Skirt
Capacity.....1245 Gal. / 1395 nominal
Weight..... 2398 Lbs.

Material Specifications

Heads..... Carbon Steel
Shell..... Carbon Steel
Couplings..... Carbon Steel
Flanges..... N/A
Pipe..... N/A
Manway..... N/A

** Overall height and diameter may vary due to variations in Topcoat thickness

Mark	Dimension	Remark
A	122.25”	Overall height (Includes Insulation)
B	114”	Tank height
C	64.5”	Diameter (Includes Insulation)
D	27”	Circulation

NOTES	
PROJECT	
CUSTOMER	
SCALE	Not to Scale
DATE	
CUSTOMER P.O. #	
DRAWING Rev NO.	

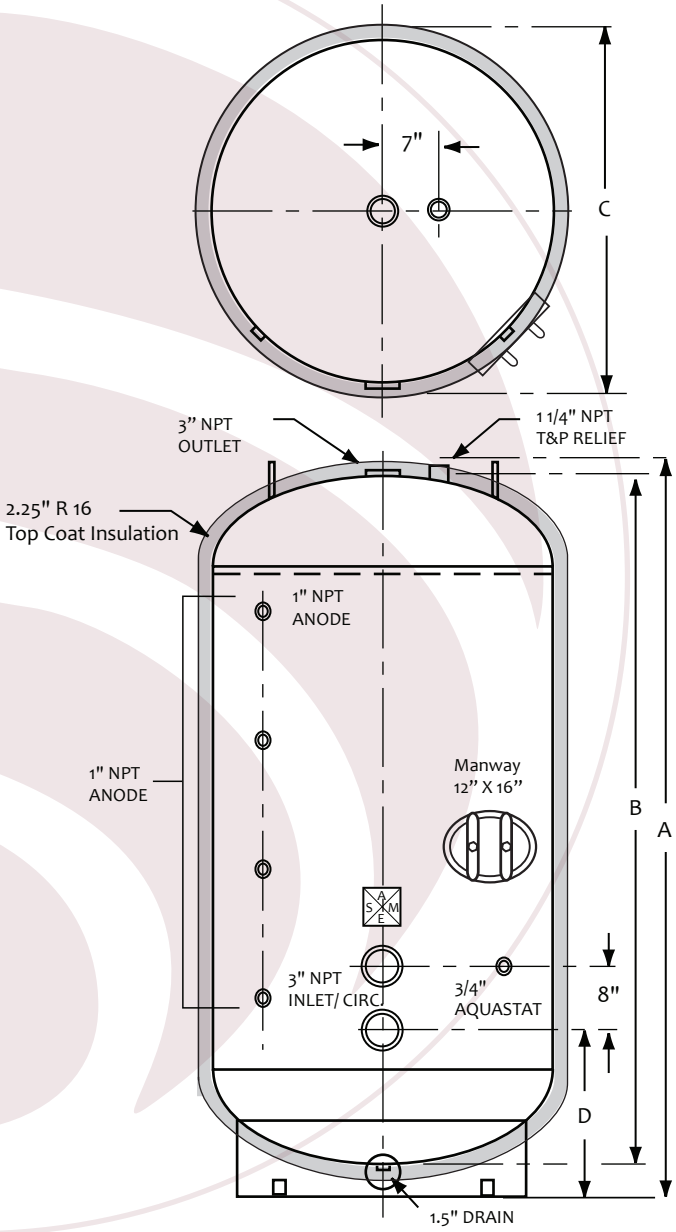

VERTICAL STORAGE TANK w/ topcoat insulation

NILES STEEL TANK • 1701 TERMINAL ROAD • PO BOX 728 • NILES • MI • 49120
PHONE • 269-683-1910 FAX • 269-683-1953 WWW.nilesst.com

A SUBSIDIARY OF BRADFORD WHITE CORPORATION