MODEL # S-48-120-TC

NST
NILES STEEL TANK
SINCE 1898

Design Notes

Code..... ASME Sec IV HLW
Design Pressure..... 125 psi
Test Pressure.....125 psi
Interior.....Ultonium Glass Lining
Exterior.....R-16 Topcoat Insulation
Supports.....Skirt
Capacity.....860 Gal. / 940 nominal
Weight.....1567 Lbs.

Material Specifications

Heads..... Carbon Steel
Shell..... Carbon Steel
Couplings..... Carbon Steel
Flanges..... N/A
Pipe..... N/A
Manway..... Carbon Steel

** Overall height and diameter may vary due to variations in Topcoat thickness

Mark	Dimension	Remark
A	126.25"	Overall height (Includes Insulation)
B	120"	Tank height
C	52,5"	Diameter (Includes Insulation)
D	22"	Circulation

NOTES	
PROJECT	
CUSTOMER	
SCALE	Not to Scale
DATE	
CUSTOMER P.O. #	
DRAWING Rev NO.	

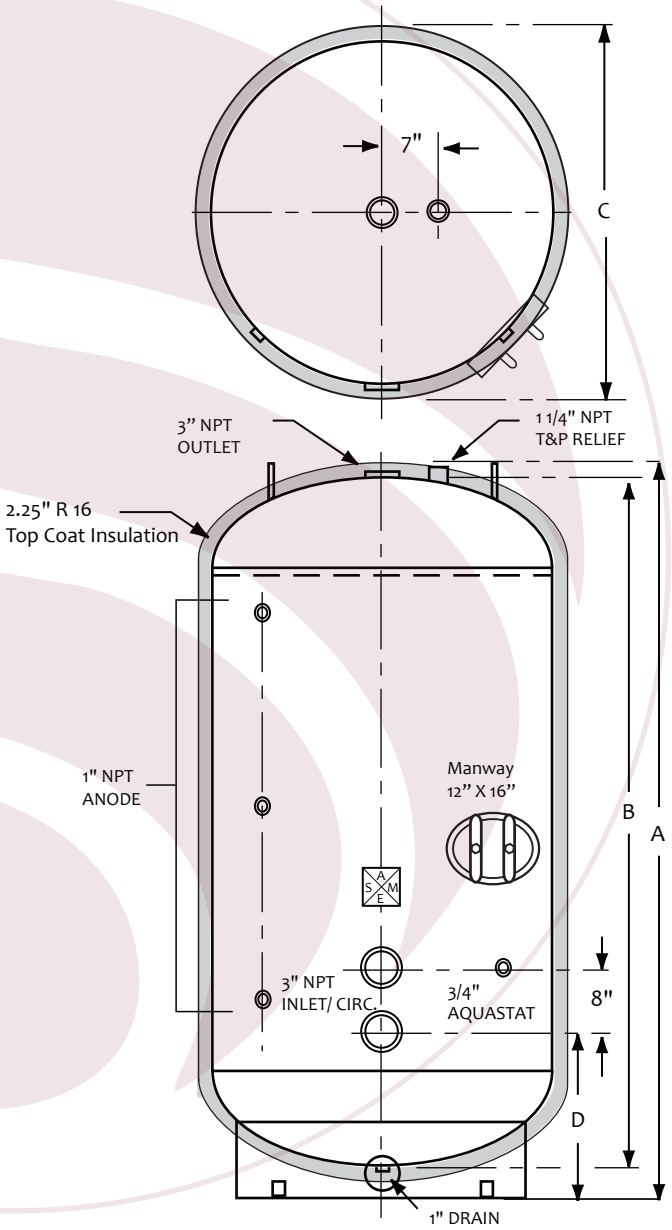

VERTICAL STORAGE TANK

NILES STEEL TANK • 1701 TERMINAL ROAD • PO BOX 728 • NILES • MI • 49120
PHONE • 269-683-1910 FAX • 269-683-1953 WWW.nilesst.com

A SUBSIDIARY OF BRADFORD WHITE CORPORATION