# MODEL # JS-42-084

NST
NILES STEEL TANK
SINCE 1898

## Design Notes

Code..... ASME Sec IV HLW
Design Pressure..... 125 psi
Test Pressure.....125 psi
Interior.....Ultonium Glass Lining
Exterior..... Baked Enamel Steel Jacket
Insulation..... 2" R-12.5 Open Cell Foam
Supports..... 2" Rails
Capacity.....453 Gal./ 504 nominal
Weight.....1074 Lbs.

## Material Specifications

Heads..... Carbon Steel
Shell..... Carbon Steel
Couplings..... Carbon Steel
Flanges..... N/A
Pipe..... N/A
Manway..... Carbon Steel
Jacket..... 24 Gauge Steel

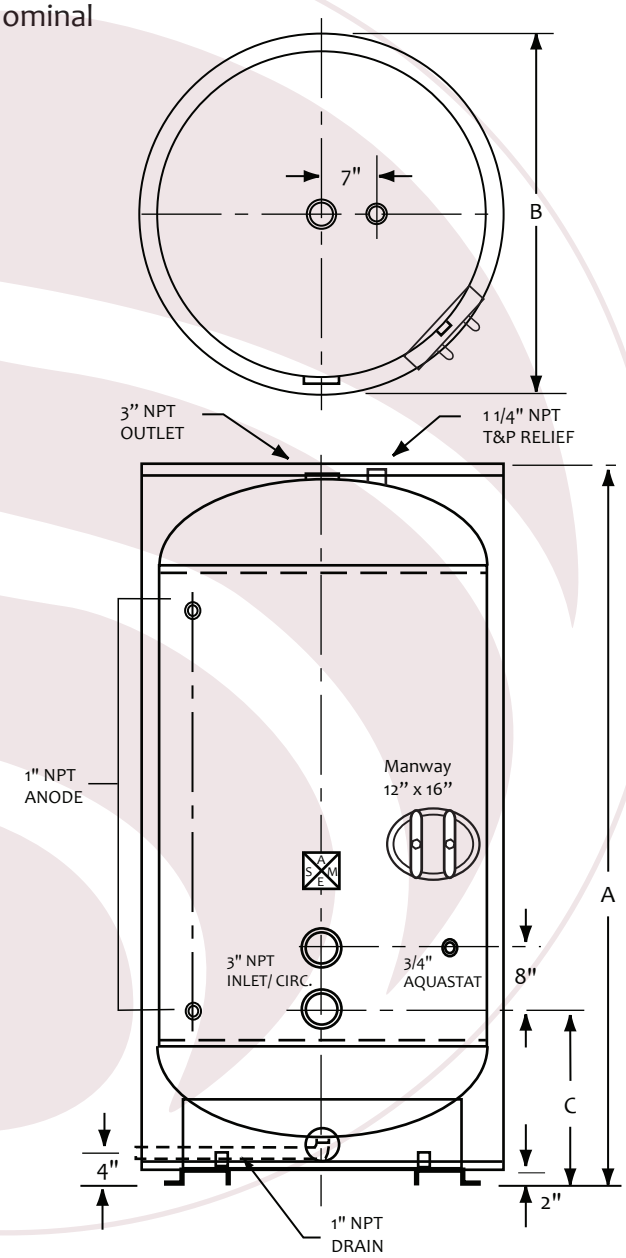


VERTICAL STORAGE TANK

| Mark | Dimension | Remark |
|---|---|---|
| A | 92" | Overall height |
| B | 46" | Diameter |
| C | 22.5" | Circulation |
| | | |
| | | |
| | | |
| | | |
| | | |
| | | |
| | | |
| | | |
| | | |

| NOTES | |
|---|---|
| PROJECT | |
| CUSTOMER | |
| SCALE | Not to Scale |
| DATE | |
| CUSTOMER P.O. # | |
| DRAWING Rev NO. | |

NILES STEEL TANK • 1701 TERMINAL ROAD • PO BOX 728 • NILES • MI • 49120
PHONE • 269-683-1910 FAX • 269-683-1953 WWW.nilesst.com

A SUBSIDIARY OF BRADFORD WHITE CORPORATION